Mercedes-Benz
Trucks you can trust

ClassicSpace L-Cab 2300 mm.

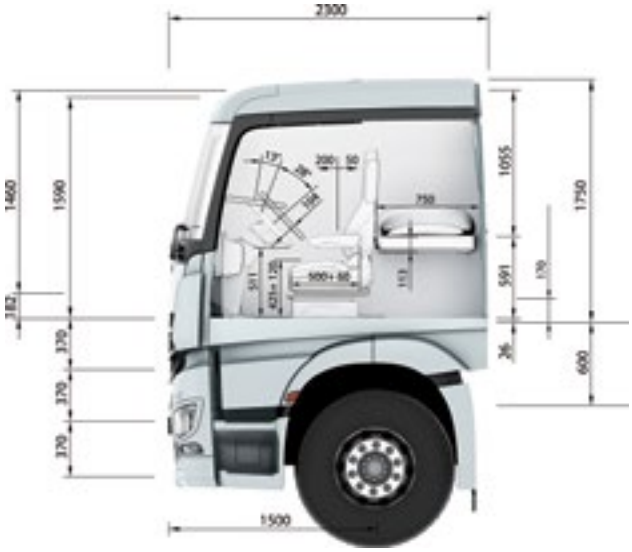

Exterior width [mm]	2300
Exterior length [mm]	2300
Headroom in front of the seats [mm]	1590
Headroom on 170 mm engine tunnel variant [mm]	1460
Headroom on 320 mm engine tunnel variant [mm]	1310
Headroom on level floor [mm]	1640

The generous amount of room and stowage space and the standard-specification comfort bed with a length of 2000 mm and a width of 750 mm makes the 2300 mm wide ClassicSpace L-cab suitable for applications lasting more than one day. The cab is available with a 170 mm or 320 mm engine tunnel and on request also with a level floor

Date September 2016